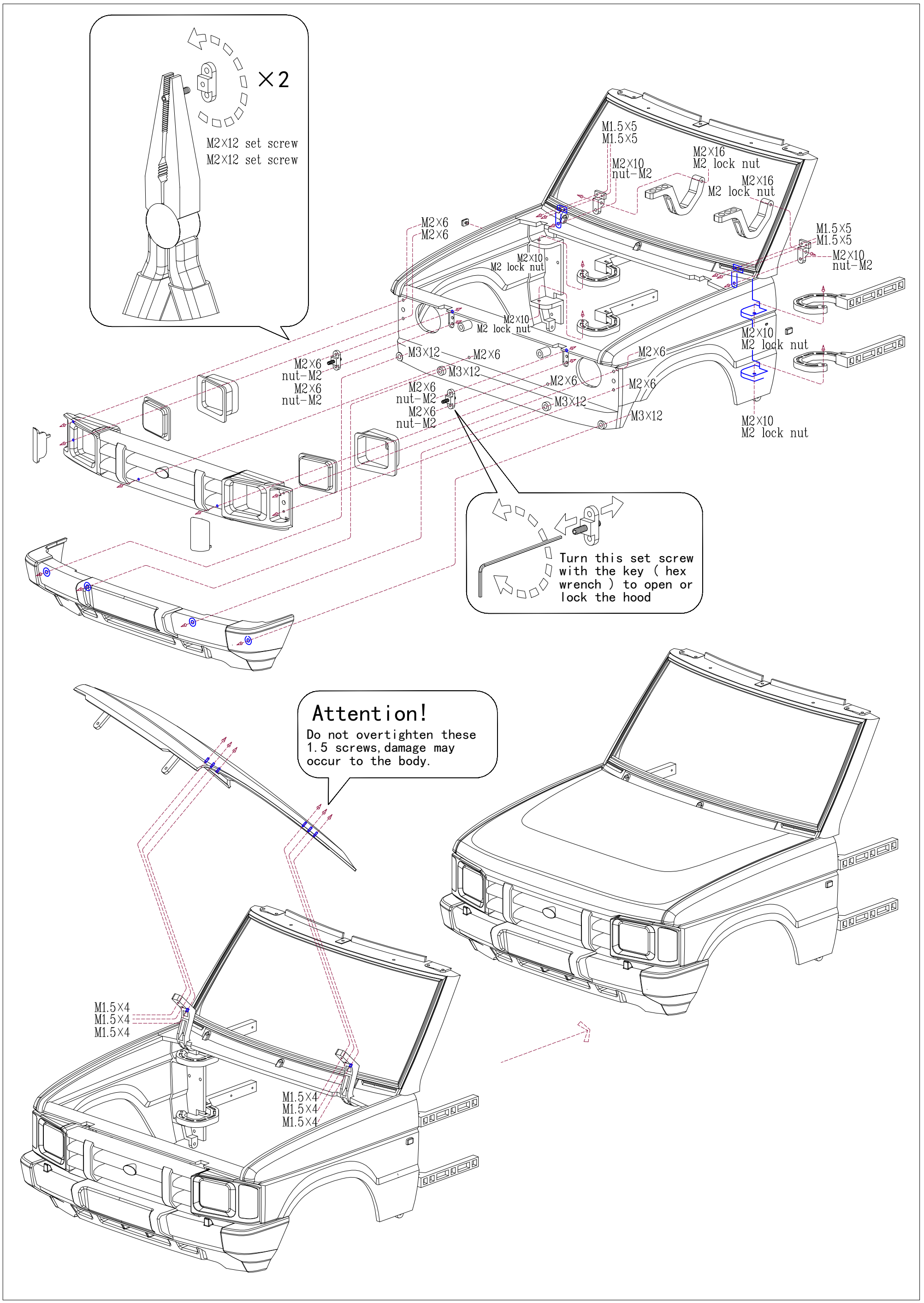
×2
M2×12 set screw
M2×12 set screw
M1.5×5
M1.5×5
M2×10
nut-M2
M2×16
M2 lock nut
M2×16
M2 lock nut
M2×6
M2×6
M1.5×5
M1.5×5
M2×10
nut-M2
M2×10
M2 lock nut
M2×10
M2 lock nut
M2×10
M2 lock nut
M2×6
nut-M2
M2×6
nut-M2
M3×12
M2×6
M3×12
M2×6
M2×6
nut-M2
M2×6
nut-M2
M2×6
M3×12
M2×6
M3×12
M2×10
M2 lock nut
Turn this set screw with the key (hex wrench) to open or lock the hood
Attention!
Do not overtighten these 1.5 screws,damage may occur to the body.
M1.5×4
M1.5×4
M1.5×4
M1.5×4
M1.5×4
M1.5×4