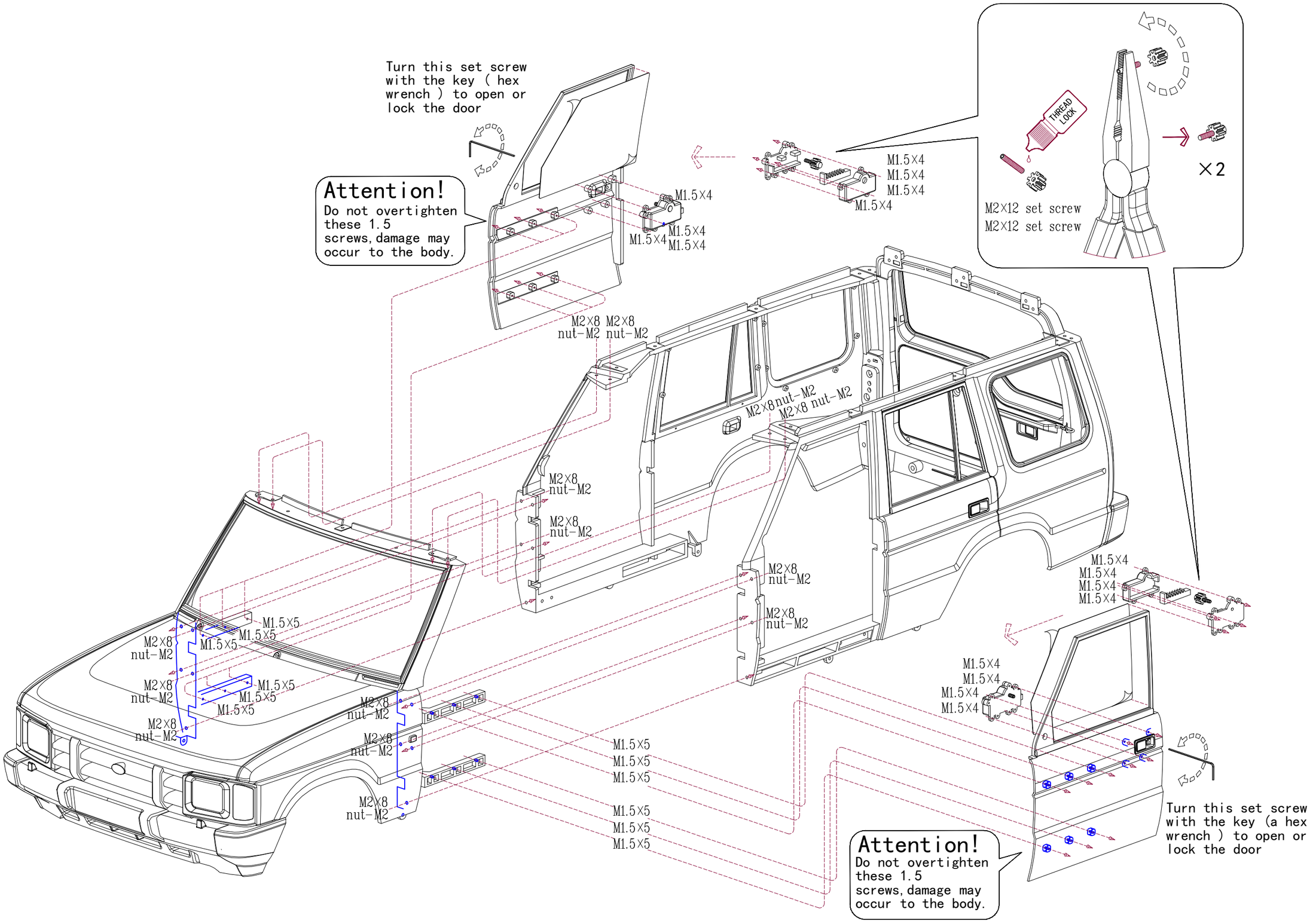
Turn this set screw with the key (hex wrench) to open or lock the door
Attention!
Do not overtighten these 1.5 screws, damage may occur to the body.
M1.5×4
M1.5×4
M1.5×4
M1.5×4
M1.5×4
M1.5×4
M1.5×4
M1.5×4
THREAD LOCK
×2
M2×12 set screw
M2×12 set screw
M2×8 nut-M2
M2×8 nut-M2
M2×8 nut-M2
M2×8 nut-M2
M2×8 nut-M2
M2×8 nut-M2
M2×8 nut-M2
M2×8 nut-M2
M2×8 nut-M2
M2×8 nut-M2
M2×8 nut-M2
M2×8 nut-M2
M2×8 nut-M2
M1.5×5
M1.5×5
M1.5×5
M1.5×5
M1.5×5
M1.5×5
M1.5×5
M1.5×5
M1.5×5
M1.5×5
M1.5×5
M1.5×5
M1.5×4
M1.5×4
M1.5×4
M1.5×4
M1.5×4
M1.5×4
M1.5×4
M1.5×4
Attention!
Do not overtighten these 1.5 screws, damage may occur to the body.
Turn this set screw with the key (a hex wrench) to open or lock the door