Complete Rear Assembled Portal Axle For BRX70 / BRX90 #BRPT7023 / #BRPT9023

Difficulty Level: ★⯪☆☆☆

INSTALLATION MANUAL

Parts Included:	Qty.
(1) Portal Lockout **#BRPT7023B** (BRX70) **#BRPT9023B** (BRX90)	2
(2) Portal Cover **#BRPT003**	2
(3) Portal Gear Set:	
- (A) Gear 16T	4
- (B) Gear 20T	4
- (C) D4/7x2.5 Bearing	10
- (D) D4/8x3 Bearing	2
- (E) D4/8x3 Bearing	2
- (F) D4/8x3 Bearing	2
- (G) Output Shaft	2
- (H) D3/7x0.6 E-clip **#BRPT001**	2
(4) Rear Shaft **#BRPT7023A** (BRX70) **#BRPT9023A** (BRX90)	2
(5) Anti-Twist Left & Right **#BRPT004**	1
(6) D5/9x3 Bearing **#BBZMR952RS**	2
(7) M3x12 RS Screw **#BRASBH3012**	2
(8) M3x16 RS Screw **#BRASBH3016**	4
(9) D3/6x1 Spacer **#BRASSPD361**	2

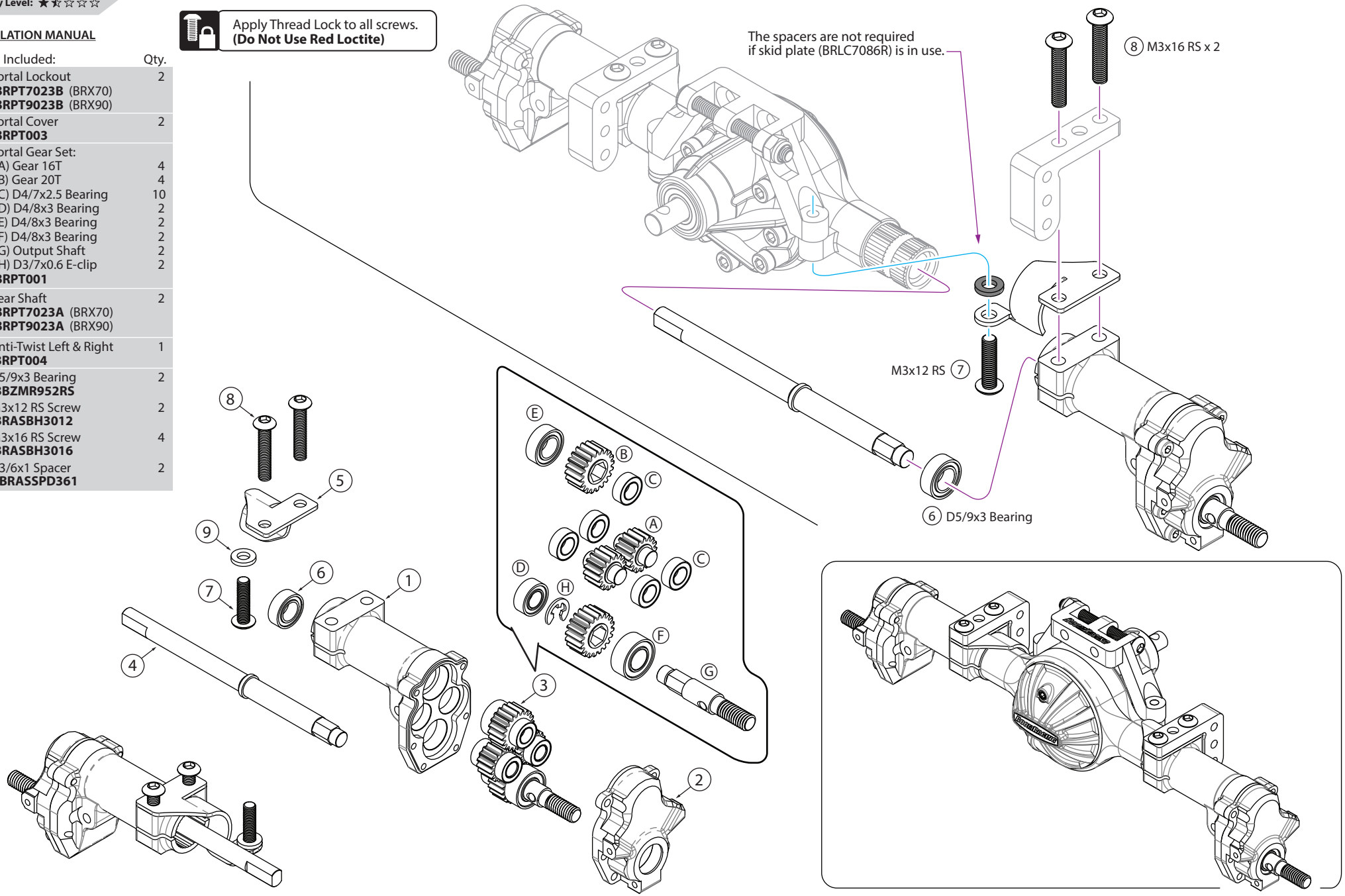

Copyright Boom Racing Ltd. All Rights Reserved.